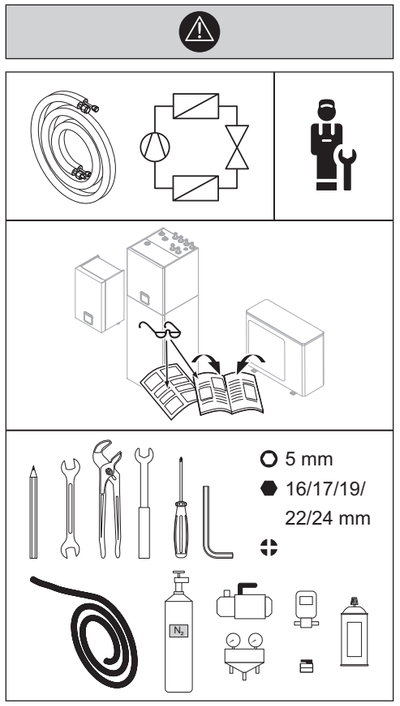

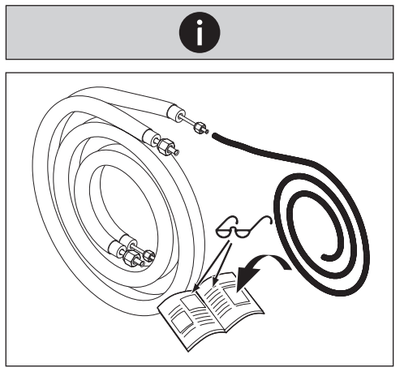

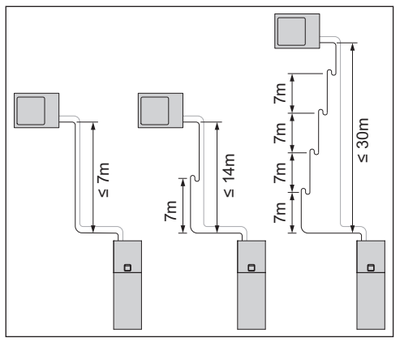

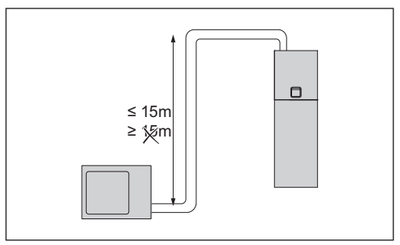

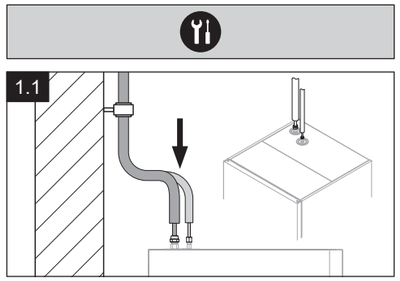

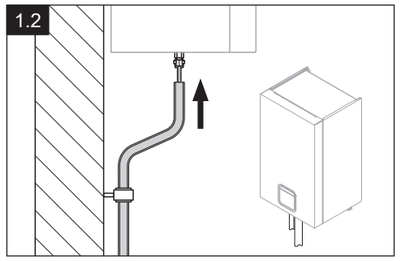

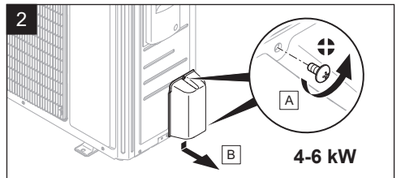

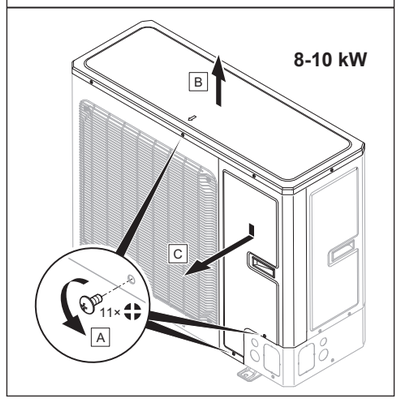

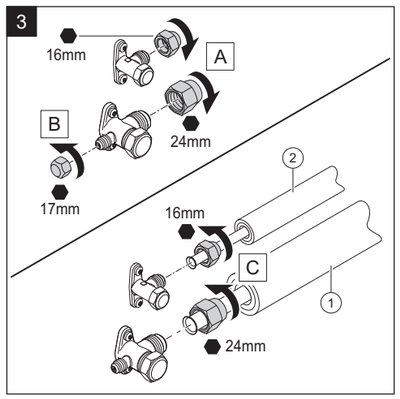

	Ø	M
1	1/2“	50 – 60 Nm
2	1/4“	15 – 20 Nm

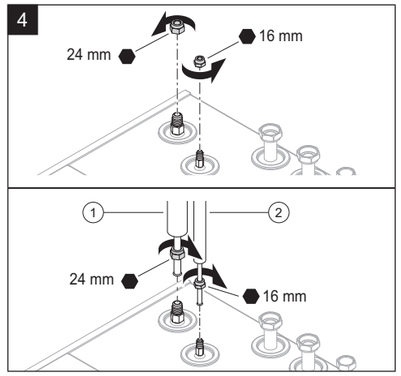

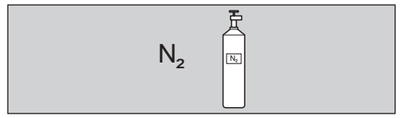

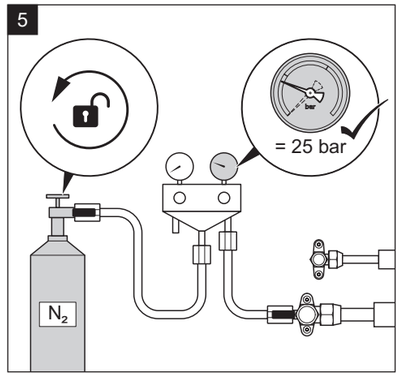

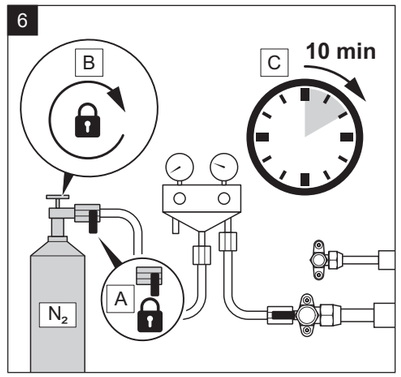

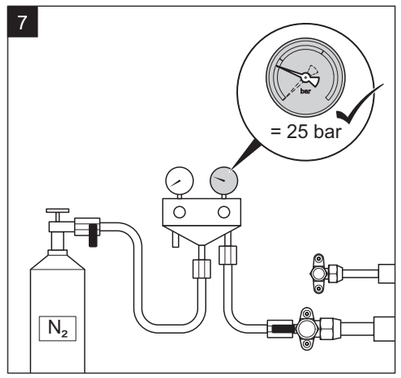

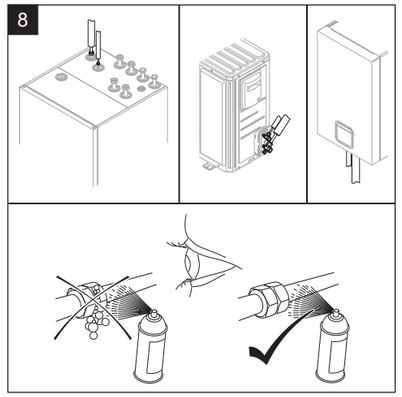

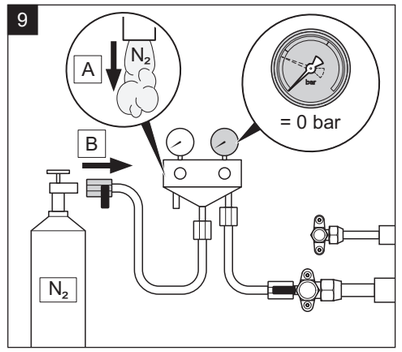

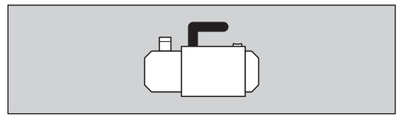

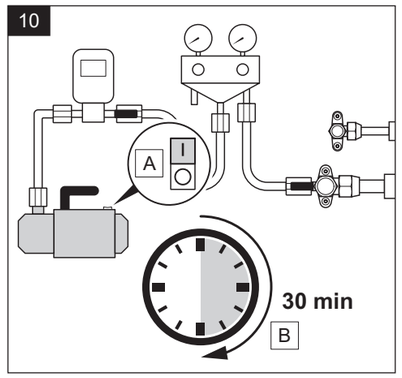

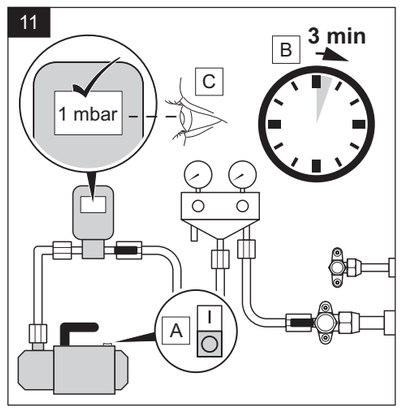

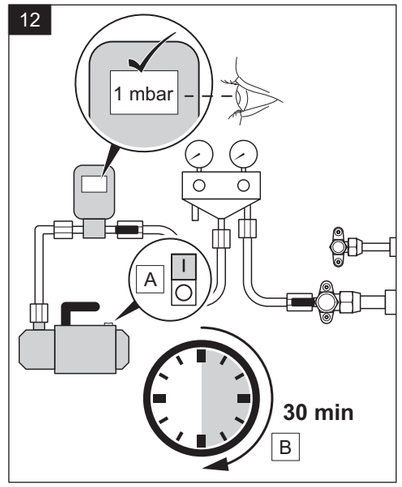

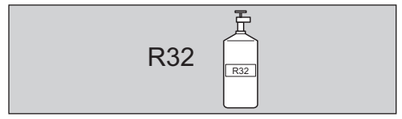

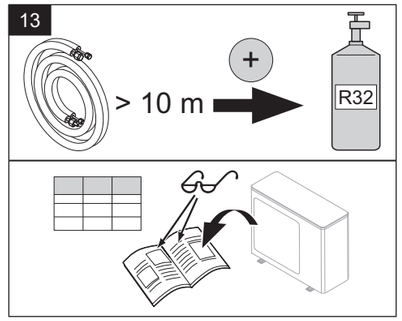

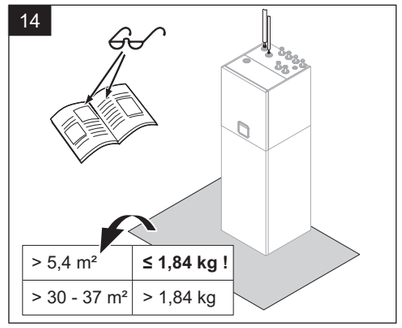

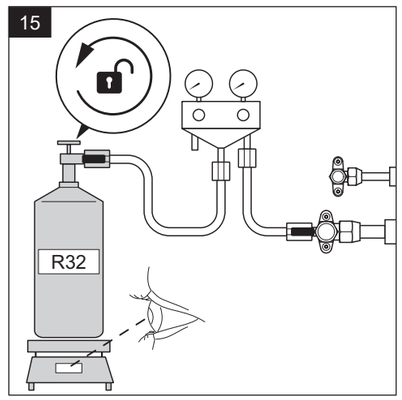

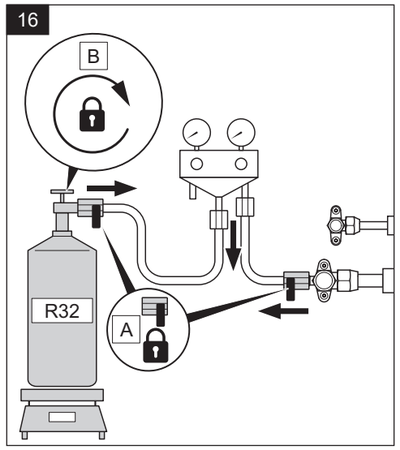

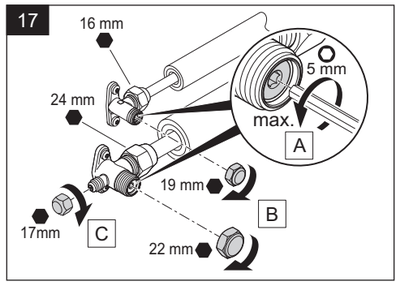

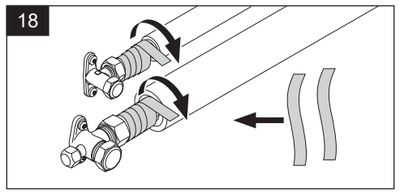

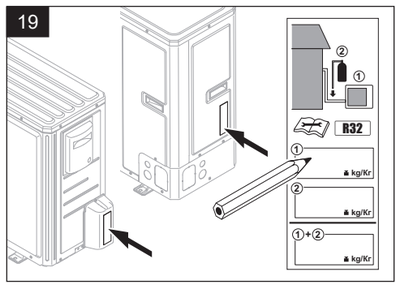

0020315290_00 / 012021 / Subject to change